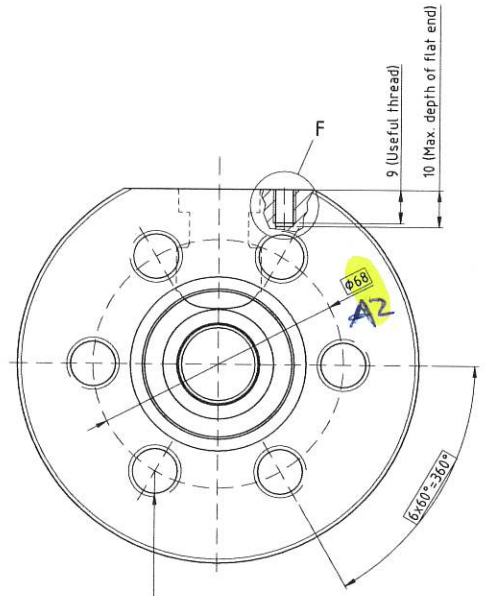

⌖ Φ0.25 — 6 Holes UNC 9/16"-12
Useful screw depth: 22 mm
Max. depth on drill point: 29 mm

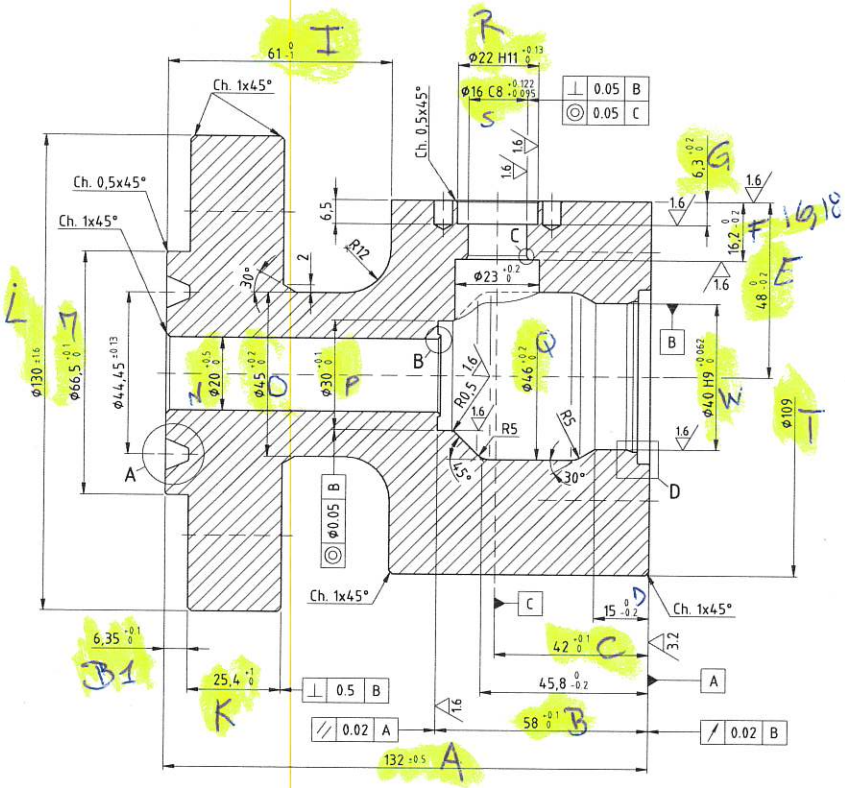

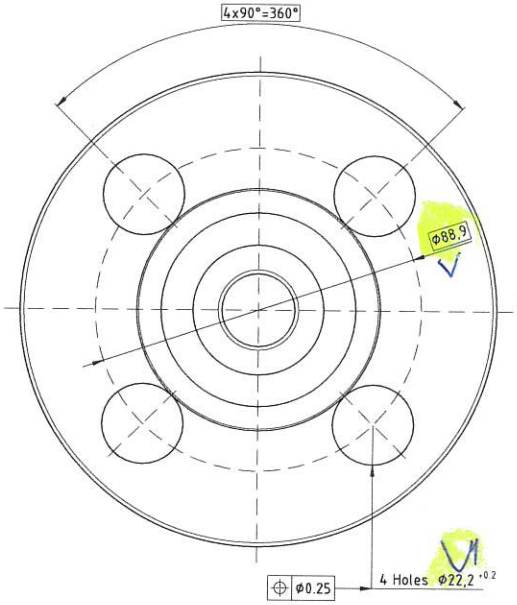

⌖ Φ0.25

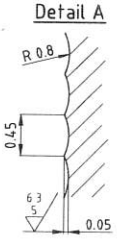

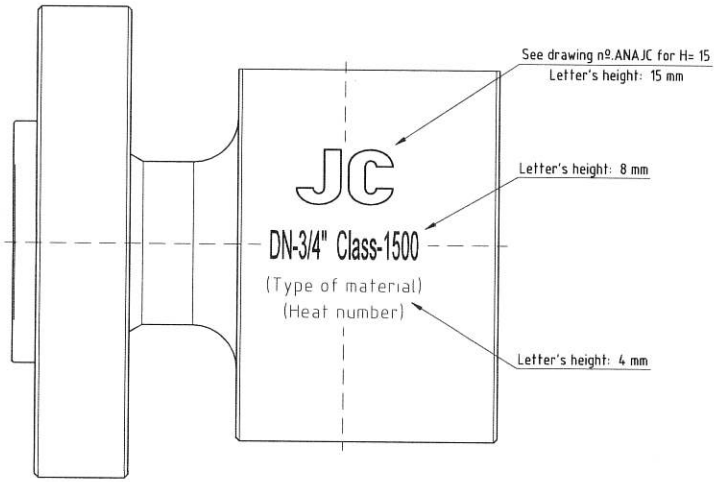

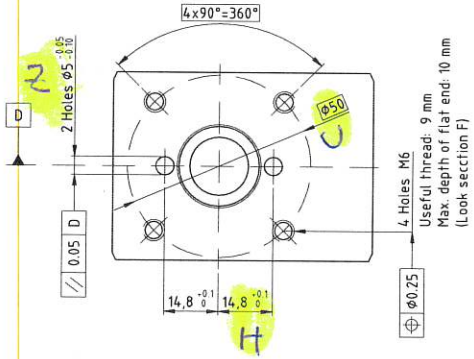

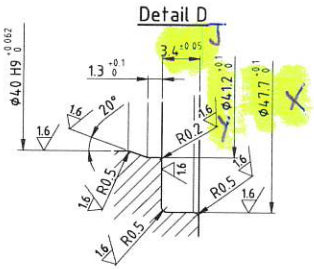

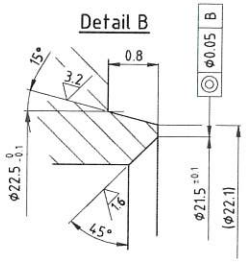

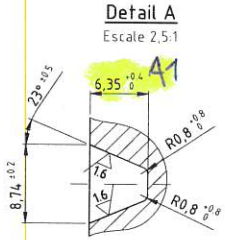

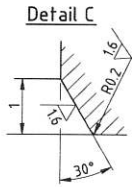

Non-dimensioned radius = 2 mm
Sharp edges to be removed

0	First issue	3-6-22	MCC	JSB	JR		
Rev.	Modification	Date	Done	Chk.	App.		

Admis. dif. with sizes without tolerances DIN 7168 Rough | Surface

	Date	Name
Drawn	3-6-22	M.C.C.
Check	3-6-22	JSB
Appro.	3-6-22	J.R.

JC VALVES
JC Fábrica de Válvulas, S.A.U.
08830 Sant Feu de Llobregat (Spain)
Tel. +(34) 934 54 86 94
e.mail: technical@jc-valves.com

Scale: 1:1 | Weight: 6,88 Kg | Pos.: 1
Material: Your order
Pattern nº.:

BODY
FIG.550BX DN-3/4" Class-1500
RTJ

Drawing nº.: 0550BX020CR | 0
Subs.: | Subs. by:

This drawing is our property. It is strictly forbiden to use the drawing, to give it to third parties or to reproduce it totally or partially without our permission.

DIN 7168 Part 1. General tolerances in lengths & angular measures

precision degree	Nominal measures											
f (fine)	0.5	3	6	30	120	400	1000	2000				
m (medium)	0.5	3	6	30	120	400	1000	2000				
c (coarse)	±0.5	±1	±2	±5	±10	±20	±30	±40				
v (very coarse)		±1	±2	±5	±10	±20	±30	±40				

DIN 7168 Part 2. General tolerances of shape

precision degree	Nominal measures											
H	0.5	6	30	120	400	1000	2000					
K	0.5	6	30	120	400	1000	2000					
L	0.2	0.5	1	2	3	4	5					

DIN 7168 Part 3. General tolerances of position

precision degree	Symmetry	Coaxiality	Run-out
H	0.5	1	0.5
K	0.6	1.2	0.6
L	0.8	1.5	0.8