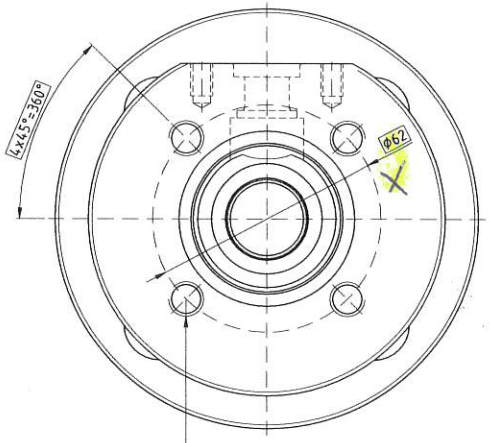

Ø0.25 — 4 Holes UNC 3/8"-16
Useful screw depth: 15 mm
Max. depth on drill point: 20 mm

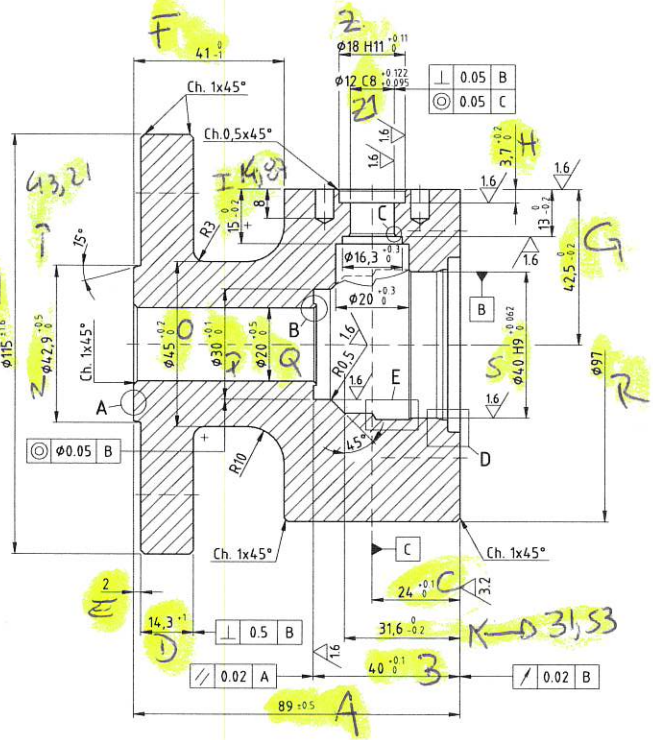

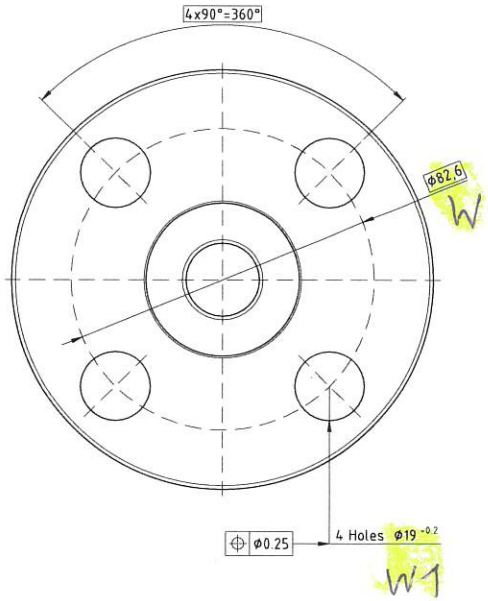

Detail A

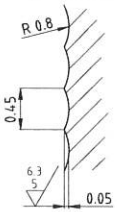

Detail B

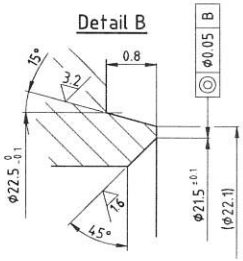

Detail C

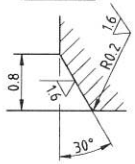

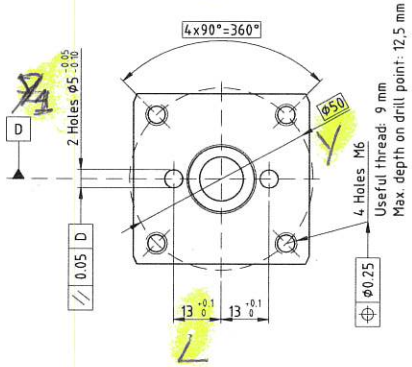

Detail E

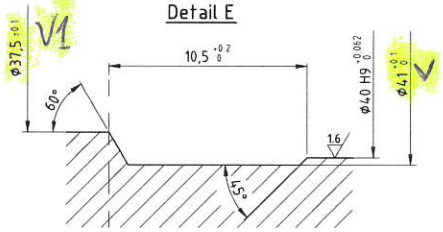

Detail D

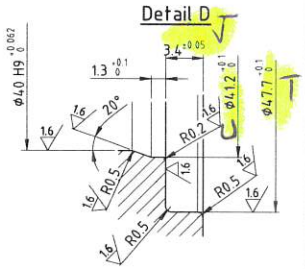

Non-dimensioned radius = 2 mm
Sharp edges to be removed

6.3 / (3.2 / 1.6 / 6.3 / 5)

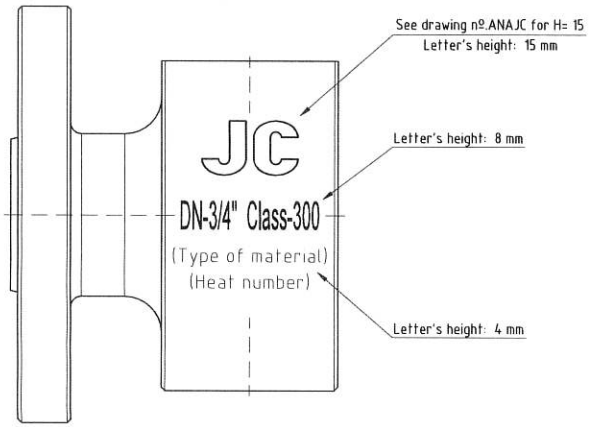

DIN 7168 Part 1 General tolerances of length & angular measures														
precision degree	Nominal dimensions													
	Deviations	0.5 3	3 6	6 30	30 120	120 400	400 1000	1000 2000	2000 4000	4000 8000	8000 12000	12000 16000	16000 20000
c (rough)		±0.15	±0.2	±0.5	±0.8	±1.2	±2	±3	±4	±5	±6	±7	±8

DIN 7168 Part 2 General tolerances of shape														
precision degree	Nominal dimensions													
	Deviations	0.5 6	6 30	30 120	120 400	400 1000	1000 2000	2000 4000	4000 8000	8000 12000	12000 16000	16000 20000
S	alignment & smoothness													
	vertical until	0.002	0.005	0.01	0.02	0.05	0.1	0.2	0.5	1	1.5	2

DIN 7168 Part 2 General tolerances of position		
precision degree	Symmetry	1
	Concentricity & parallelism	0.5

				(Admis. dif. with sizes without tolerances) DIN 7168 Rough	(Surface)	Scale: 1:1	Weight: 3,53 Kg	Pos.: 1
						Material: Your order Pattern nº.:		
				Date	Name	BODY		
				Drawn 8-1-20	M.C.C.	FIG.530BX DN-3/4" Class-300		
				Chec. 8-1-20	J.R.			
				Norm.				
0	First issue	8-1-20	M.C.C.	JC Valves JC Fábrica de válvulas, s.a. 08630 Sant Boi de Llobregat (Spain) Tel. + (34) 936 54 86 85 // Fax + (34) 936 54 86 87 e.mail: technical@jc-valves.com		Drawing nº.: 0530BX020C		Sheet 0
Rev.	Modification	Date	Nam.			Subs.:	Subs. by:	

This drawing is our property. It is strictly forbidden to use the drawing, to give it to third parties or to reproduce it totally or partially without our permission.