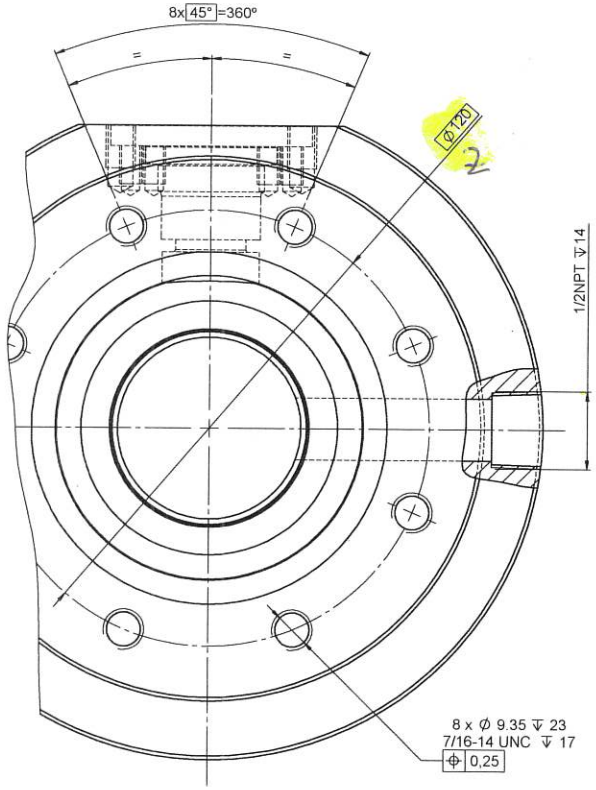

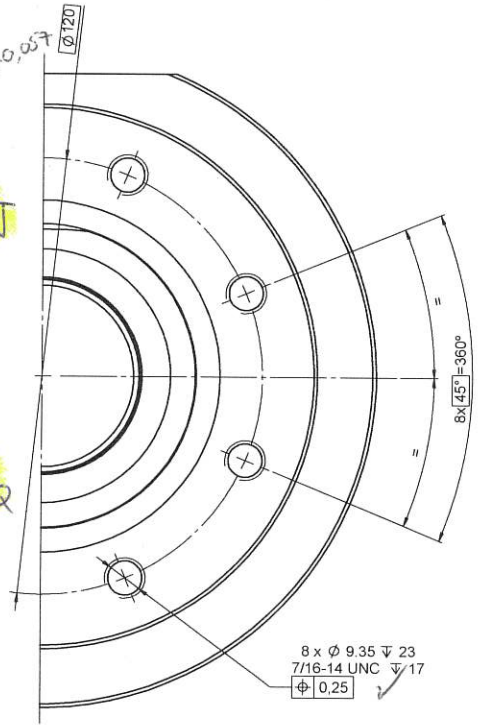

Marking View

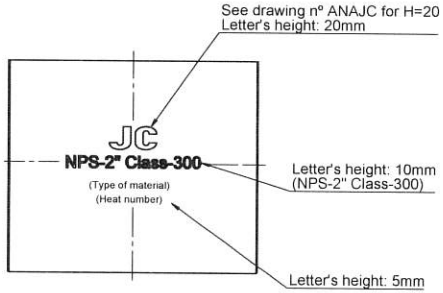

Isometric View

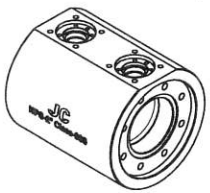

Detail A

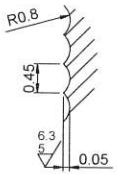

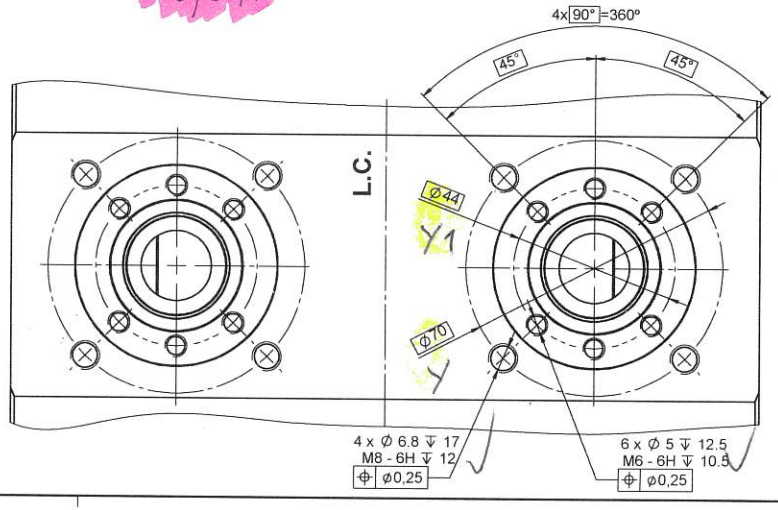

Detail B

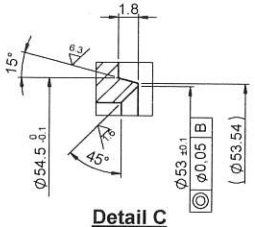

Detail D

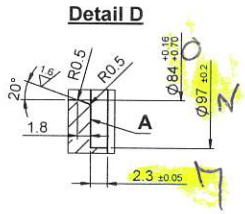

Detail C

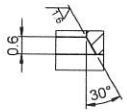

Detail E

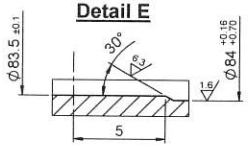

Sharp edges to be removed

0	First issue	05/2025	L.D.	M.C.	J.R.	
Rev.	Modification	Date	Done	Chk.	App.	

Admis. dif. with sizes without tolerances DIN 7168 Rough

Surface 6.3

	Date	Name
Drawn	05/05/2025	L.D.
Check	05/05/2025	M.C.
Appro.	05/05/2025	J.R.

JC VALVES

JC Fábrica de Válvulas, S.A.U.
08830 Sant Boi de Llobregat (Spain)
Tel. + (34) 936 54 96 96
e-mail: technical@jc-valves.com

Scale: 1:1 | Weight: 31.1Kg | Pos: 1

Material: Your order
Pattern nº.

BODY

Fig.530DBBQ NPS-2" Class-300

DOUBLE BLOCK AND BLEED

Drawing nº.: 0530DBB050CQ

0

Subs. a: | Subs. by:

This drawing is our property. It is strictly forbidden to use the drawing, to give it to third parties or to reproduce it totally or partially without our permission.