DIN 7168 Part 1: General Tolerances in length & angular measures											
	Nominal measures										
precision degree g (rough)	more than	0.5	3	6	30	120	400	1000	2000	4000	
	until	3	6	30	120	400	1000	2000	4000		
		±0.15	±0.2	±0.5	±0.8	±1.2	±2	±3	±4	±5	

DIN 7168 Part 2: General tolerances of shape								
	Nominal measures							
precision degree S	Alignement & smoothness	more than	0.5	6	30	120	400	1000
		until	6	30	120	400	1000	2000
			0.008	0.02	0.04	0.08	0.15	0.3

DIN 7168 Part 2: General Tolerances of position		
precision degree T	Symmetry	1
	Concentricity & polish	0.5

"O" Ring

Dimensions: ø9.25 x 1.78
Material: Acc. to order

Stem Thrust Seal

Dimensions: ø17 x ø12 x 1.3
Material: Acc. to order

HT-65 Stem Thrust Seal

Material: AISI-316 + HT-65

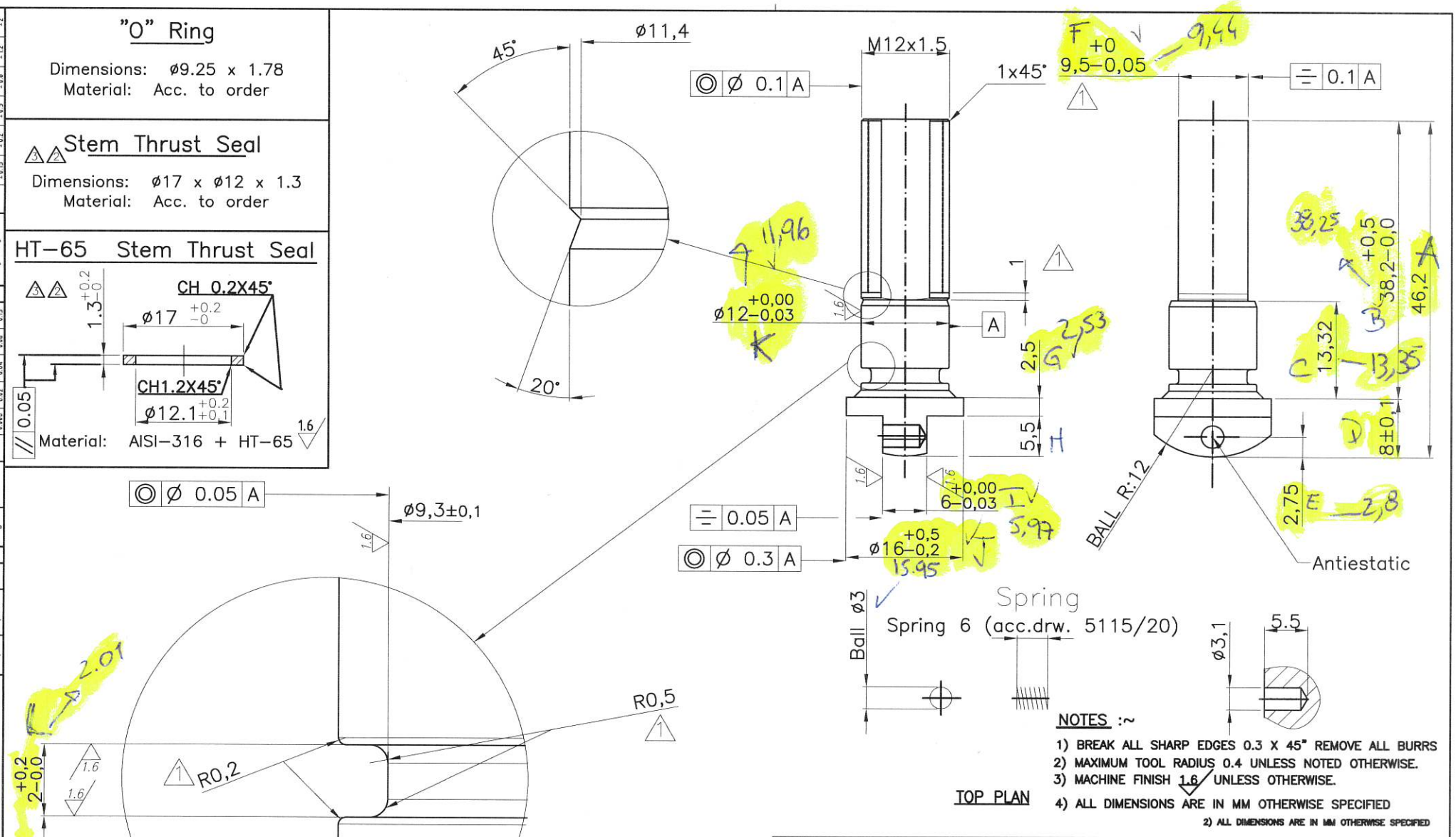

TOP PLAN

NOTES :~

1) BREAK ALL SHARP EDGES 0.3 X 45° REMOVE ALL BURRS
2) MAXIMUM TOOL RADIUS 0.4 UNLESS NOTED OTHERWISE.
3) MACHINE FINISH 1.6 UNLESS OTHERWISE.
4) ALL DIMENSIONS ARE IN MM OTHERWISE SPECIFIED

2) ALL DIMENSIONS ARE IN MM OTHERWISE SPECIFIED

R1=STEM STEP THK − 2 < 2.5
GLAND I.D − 11.2 ø < 11.4 ø

Rev.	Modification	Date	Nam.
3	2 Positions	23/03/21	L.D.
2	Add Dim. Stem Thrust Seal	14/06/18	E.H.
1	Modif. Tolerancia	03/07/12	E.H
0	First issue	01/09/04	E.H.

(Admis. dif. with sizes without tolerances) DIN 7168 Rough

(Surface)

	Date	Name
Drawn	01/09/04	E.Hidalgo
Chec.	01/09/04	E.H.
Norm.		

JC Valves

JC Fábrica de válvulas, s.a.
08830 Sant Boi de Llobregat (Spain)
Tel. + (34) 936 54 86 86 // Fax + (34) 936 54 86 87
e.mail: technical@jc-valves.com

Scale: 10:1, 2:1 | Weight: | Pos.:

Material: Your order
Pattern nº.:

STEM
FIG. 800 DN 1"

Drawing nº.: 0800-25-04 | Sheet 3

Subs.: 0800-25-04 Rev.2 | Subs. by:

This drawing is our property. It is strictly forbbiden to use the drawing, to give it to third parties or to reproduce it totally or partially without our permission.