DIN 7168 Part 1 General tolerances on lengths & angular measures												
Nominal measures		0.5	3	6	30	120	400	1000	2000	4000
Permissible deviations	fine	±0.05	±0.1	±0.1	±0.15	±0.2	±0.3	±0.5	±0.8	±1.2
	medium	±0.1	±0.2	±0.3	±0.5	±0.8	±1.2	±2	±3	±4
	coarse	±0.2	±0.5	±0.8	±1.2	±2	±3	±4	±6	±8
	very coarse	±0.5	±1	±1.5	±2.5	±4	±6	±8	±12	±16
Permissible deviations for angles	degrees	±1°	±30'	±20'	±10'	±5'	±1'	±30"	±20"	±10"

DIN 7168 Part 2 General tolerances of shape												
Nominal measures		10	30	100	300	1000	3000	10000	30000	100000
Permissible deviations	straightness & flatness	0.02	0.05	0.1	0.2	0.5	1	2	3	5
	roundness	0.02	0.05	0.1	0.2	0.5	1	2	3	5
	parallelism	0.02	0.05	0.1	0.2	0.5	1	2	3	5
	perpendicularity	0.02	0.05	0.1	0.2	0.5	1	2	3	5
	coaxiality	0.02	0.05	0.1	0.2	0.5	1	2	3	5
	symmetry	0.02	0.05	0.1	0.2	0.5	1	2	3	5
	circular run-out	0.02	0.05	0.1	0.2	0.5	1	2	3	5
	total run-out	0.02	0.05	0.1	0.2	0.5	1	2	3	5

DIN 7168 Part 2 General tolerances of position						
Permissible deviations	coaxiality	0.05	0.1	0.2	0.5	1
	symmetry	0.5	1	2	3	5

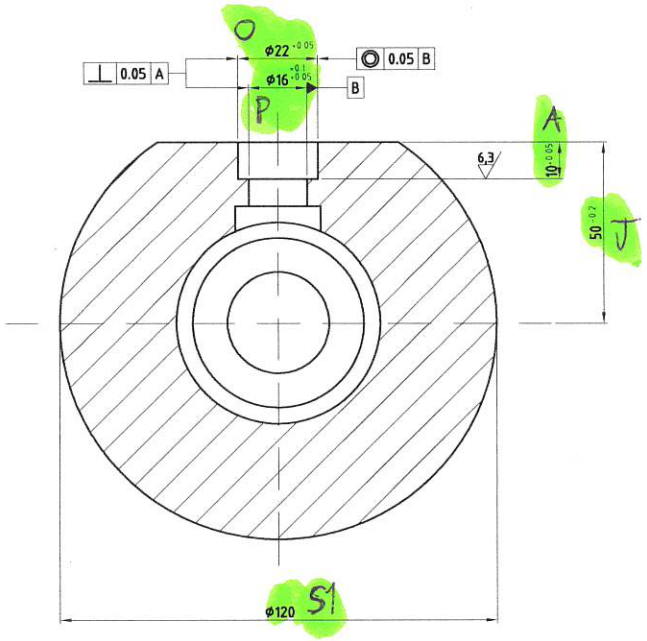

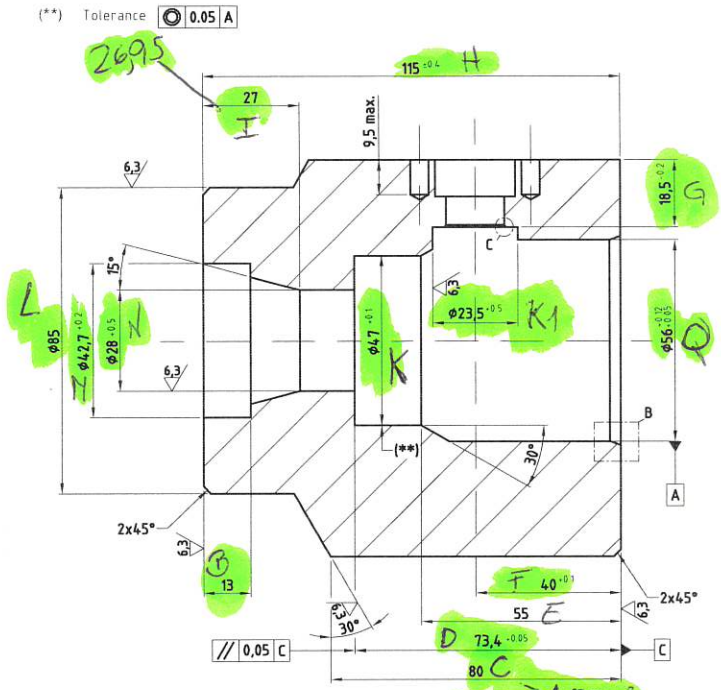

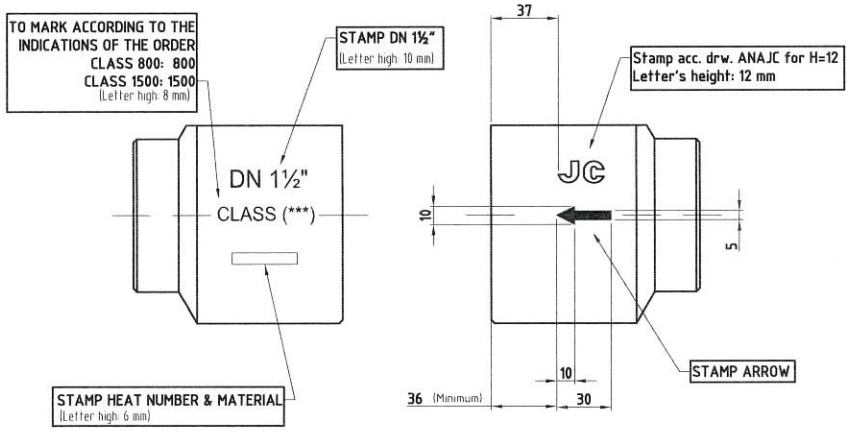

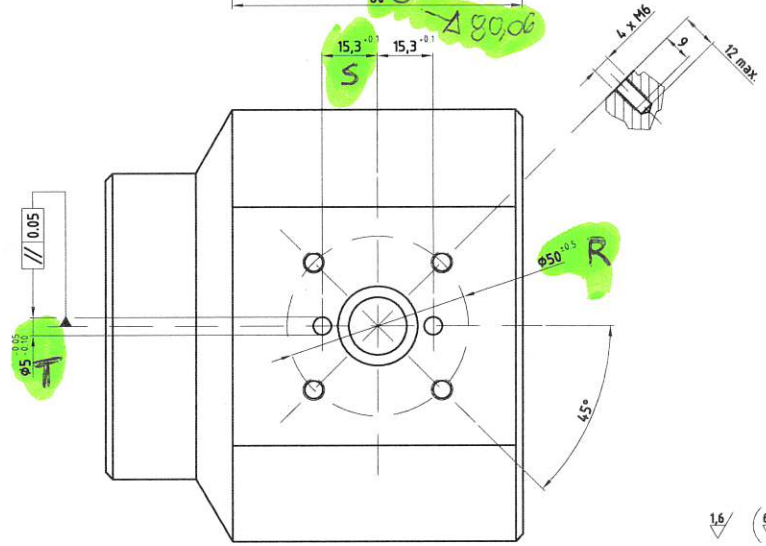

"B" DETAIL

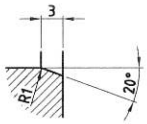

"C" DETAIL

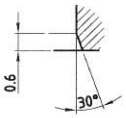

1,6 (6,3)

SHARP EDGES TO BE REMOVED 0.5x45°

0	First issue	12-06	RB			
Rev.	Modification	Date	Nam.			

(Admis. dif. with sizes without tolerances) DIN 7168 Rough

(Surface)

	Date	Name
Drawn	4-12-06	RB
Chec.	4-12-06	JR
Norm.		

JC Valves

JC Fábrica de válvulas, s.a.
08830 Sant Boi de Llobregat (Spain)
Tel. + (34) 936 54 86 86 // Fax + (34) 936 54 86 87
e.mail: technical@jc-valves.com

Scale: 1:1 | Weight: | Pos.: 01

Material: Your order
Pattern nº.:

BODY
FIG. 3412 UDV DN 1½" SW
CLASS 800 & CLASS 1500

Sheet

Drawing nº.: 3412UDV040C (0)

Subs.: | Subs. by:

This drawing is our property. It is strictly forbidden to use the drawing, to give it to third parties or to reproduce it totally or partially without our permission.